MODEL
CAGG

5:1 pilot ratio, vented counterbalance valve - atmospherically referenced
SERIES 3 / CAPACITY: 240 L/min. / CAVITY: T-17A

sunhydraulics.com/model/CAGG

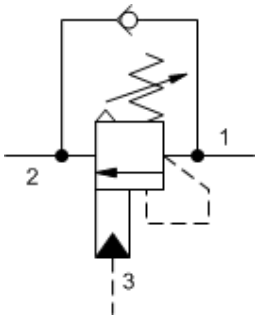

3-Port Atmospherically Referenced

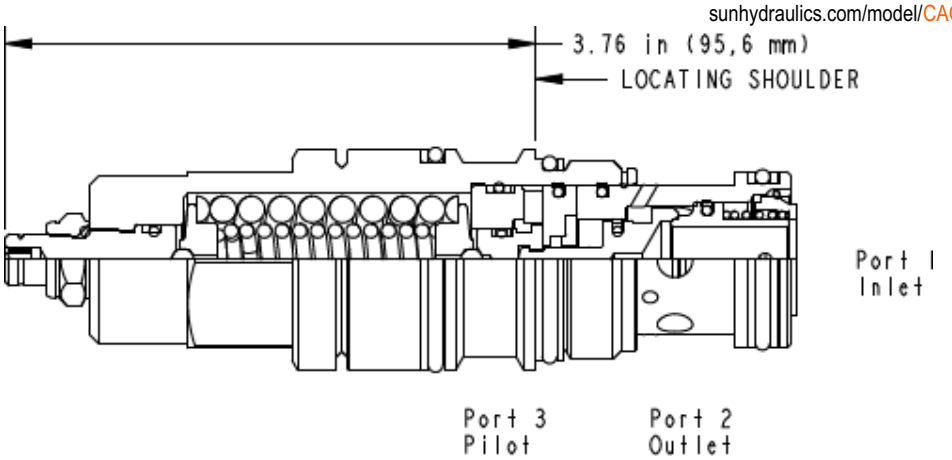

CONFIGURATION

L	Control	Standard Screw Adjustment
G	Functional Setting Range	2000 - 6000 psi (140 - 420 bar), 4000 psi (280 bar) Standard Setting
N	Seal Material	Buna-N
(none)	Material/Coating	

Atmospherically vented counterbalance valves with pilot assist are meant to control an overrunning load. The check valve allows free flow from the directional valve (port 2) to the load (port 1) while a direct-acting, pilot-assisted relief valve controls flow from port 1 to port 2. Pilot assist at port 3 lowers the effective setting of the relief valve at a rate determined by the pilot ratio. Backpressure at port 2 does not affect the valve setting because the spring chamber is atmospherically referenced.

Other names for this valve include motion control valve and over-center valve.

TECHNICAL DATA

NOTE: DATA MAY VARY BY CONFIGURATION. SEE CONFIGURATION SECTION.

Pilot Ratio	5:1
Maximum Recommended Load Pressure at Maximum Setting	320 bar
Maximum Setting	420 bar
Factory Pressure Settings Established at	30 cc/min.
Maximum Valve Leakage at Reseat	0,3 cc/min.
Check Cracking Pressure	1,7 bar
Adjustment - No. of CCW Turns from Min. to Max. Setting	5
Reseat	>85% of setting
Locknut Hex Size	15 mm
Locknut Torque	9 - 10 Nm
Seal kit - Cartridge	Buna: 990117007
Seal kit - Cartridge	Polyurethane: 990117002
Seal kit - Cartridge	Viton: 990117006

CONFIGURATION OPTIONS

Model Code Example: CAGGLGN

CONTROL (L)

- **L** Standard Screw Adjustment
- **C** Tamper Resistant - Factory Set

FUNCTIONAL SETTING RANGE (G)

- **G** 2000 - 6000 psi (140 - 420 bar), 4000 psi (280 bar) Standard Setting
- **F** 1000 - 2500 psi (70 - 175 bar), 2000 psi (140 bar) Standard Setting

SEAL MATERIAL (N)

- **N** Buna-N
- **V** Viton

MATERIAL/COATING

- Standard Material/Coating
- **/AP** Stainless Steel, Passivated

© 2024 Sun Hydraulics